EGM GROUP

CW617N

TECHNICAL SHEET

BRASS RODS

INTERNATIONAL REFERENCES

EGM	EN	DIC CEN	ASTM(CDA)	AFNOR	BS	JIS
DIN	CuZn40Pb2	CW617N	C38000	-	CZ122	C377

MAIN CHARACTERISTICS

Standard alloy for hot stamping but used as well in turnings applications which need to be in contact with drinking water; in fact this alloy is included in the 4MS positive list (UBA LIST).

CHEMICAL COMPOSITION

Cu [%]	Pb [%]	Sn [%]
57,0 - 59,0	1,6 - 2,2	≤ 0,3

Rev. 03/25

© 2020 S.A. Eredi Gnutti Metalli SpA - Tutti i diritti riservati
P.IVA e C.F. 00293910170 - Registro delle Imprese (REA): BS 3415
Capitale Sociale 17.920.160,00 i.v.

egmgroup.it
TEL +39 030 3513411 FAX +39 030 3540081
EMAIL info@egmgroup.it PEC eredignutti@legalmail.it

CW617N

TECHNICAL SHEET

PHYSICAL PROPERTIES

Density	8.43g/cm3
Electrical Conducivity	14.5MS/m
Electrical Conducivity	25IACS %
Thermal Conducivity	120W/mK

MECHANICAL PROPERTIES

Temper	Diameter / Wrench size [mm]	Tensile Strength Rm [N/mm2]	Yeld Strength Rp0.2 [N/mm2]	Elongation A [%]	Hardness HB
M	7 - 75	(380 - 550)	(180 - 450)	(10 - 35)	(110 - 150)

Please note: The mechanical properties are indicative only.

TYPES AND FORMAT AVAILABILITY

Ø (mm)

Nominal Diameter (mm)		Tolerances (mm)		
>	≤	Type A (standard tolerances)	Type B	Type C
> 7	10	+0 / -0,06	+0 / -0,036	+0 / -0,025
10	18	+0 / -0,07	+0 / -0,043	
18	30	+0 / -0,08	+0 / -0,052	
30	50	+0 / -0,16	-	
50	75	+0 / -0,16	-	

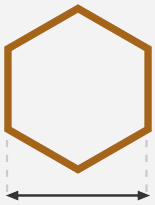

Ch. (mm)

Width across-flats (W mm)		Tolerances (mm)
>	≤	Type B
> 7	10	+0 / -0,09
10	18	+0 / -0,11
18	30	+0 / -0,13
30	45	+0 / -0,16

Rev. 03/25

© 2020 S.A. Eredi Gnutti Metalli SpA - Tutti i diritti riservati
P.IVA e C.F. 00293910170 - Registro delle Imprese (REA): BS 3415
Capitale Sociale 17.920.160,00 i.v.

egmgroup.it
TEL +39 030 3513411 FAX +39 030 3540081
EMAIL info@egmgroup.it PEC eredignutti@legalmail.it

SHAPES OF THE ENDS

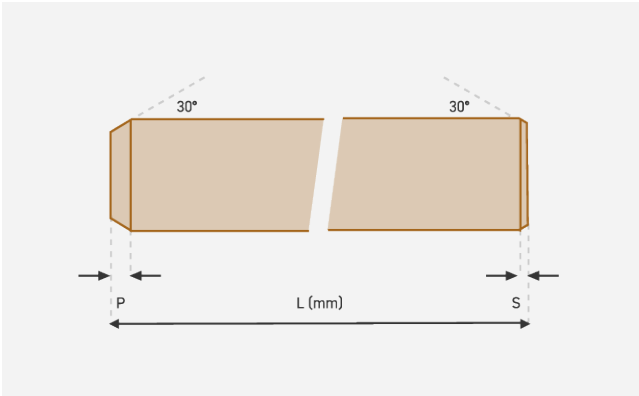

Shaped ends of rod chamfered (mm)					
Ø		P (point)		S (chamfer)	
>	≤	min.	max.	min.	max.
7	10	2	3,5	2	3,5
10	20	2	4,5	2	4,5
20	30	3,5	6,5	3,5	6,5
30	42	4	6,5	4	6,5
43	75	6	8	6	8

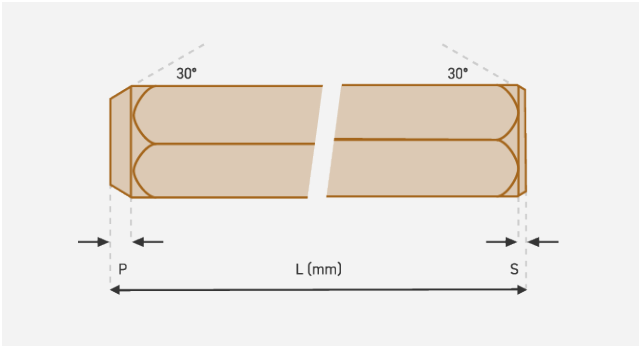

Shaped ends of rod pointed (mm)					
Ch.		P (point)		S (chamfer)	
>	≤	min.	max.	min.	max.
7	10	2	3,5	0,4	1,5
10	20	2	4,5	0,5	2
20	32	3,5	6,5	0,6	2,5
32	45	5	8	1	4

Please note: The minimum and maximum measurements for the ends are indicative only. Specific requirements regarding the length of the ends must be avaluated and agreed in the time of order.

Rev. 03/25

© 2020 S.A. Eredi Gnutti Metalli SpA - Tutti i diritti riservati
P.IVA e C.F. 00293910170 - Registro delle Imprese (REA): BS 3415
Capitale Sociale 17.920.160,00 i.v.

egmgroup.it
TEL +39 030 3513411 FAX +39 030 3540081
EMAIL info@egmgroup.it PEC eredignutti@legalmail.it

LENGHTS AND STRAIGHTENINGS

Ø (mm)

Lenght			
>	≤	Lenght (mm)	Tolerances (mm)
> 7	42	3050	+ 50
42	75	3050	+ 100

Maximum deviation from straightness			
>	≤	Localized over any 400 mm	Over whole lenght L of rod in metres L ≥ 1 m
> 7	50	0,4 mm	1,0 X L

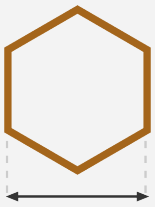

Ch. (mm)

Lenght			
>	≤	Lenght (mm)	Tolerances (mm)
> 7	30	3050	+ 50
30	45	3050	+ 100

Maximum deviation from straightness			
>	≤	Localized over any 400 mm	Over whole lenght L of rod in metres L ≥ 1 m
> 7	50	0,6 mm	1,5 X L

Please note: The straightening has to be measured according to paragraph 6.5.3 of Norms EN 12164:2016).

OTHER SERVICES

All the turning rods (from Ø7 to Ø75 and from Ch.7 to Ch.45) are supplied in nominal lengths of 3000 mm, with point (P) and chamfer (S). Upon request, the product can be supplied with ends other than those indicated and with nominal lengths up to 5000 mm. the product is supplied in bundles of about 1000 kg closed by 3 or 4 metal strapping and paper between rods and metal strappings. Packaging with other characteristics must be evaluated and agreed upon when ordering.

© 2020 S.A. Eredi Gnutti Metalli SpA - Tutti i diritti riservati
P.IVA e C.F. 00293910170 - Registro delle Imprese (REA): BS 3415
Capitale Sociale 17.920.160,00 i.v.

egmgroup.it
TEL +39 030 3513411 FAX +39 030 3540081
EMAIL info@egmgroup.it PEC eredignutti@legalmail.it